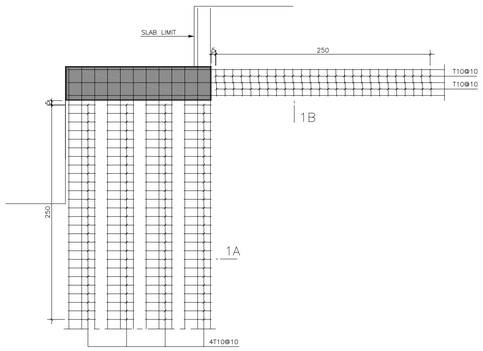

DETAIL–1
SCALE 1/25

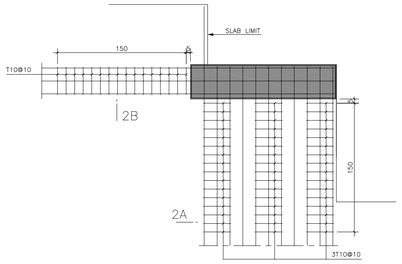

DETAIL–2
SCALE 1/25

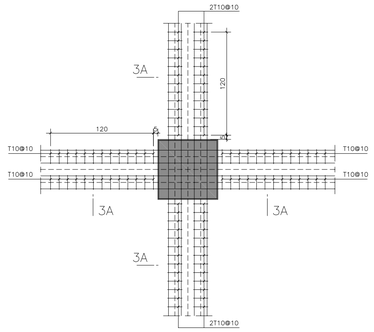

DETAIL–3
SCALE 1/25

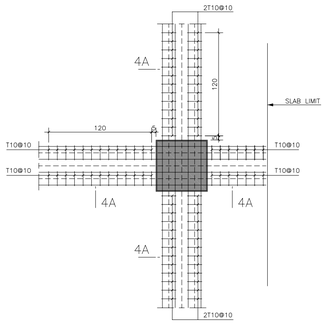

DETAIL–4
SCALE 1/25

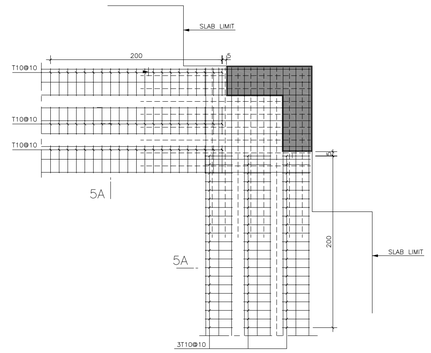

DETAIL–5
SCALE 1/25

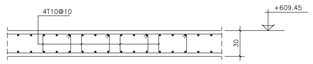

SECTION–1A
SCALE 1/25

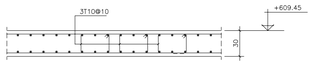

SECTION–2A
SCALE 1/25

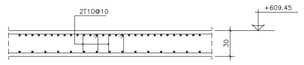

SECTION–3A
SCALE 1/25

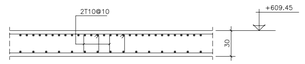

SECTION–4A
SCALE 1/25

SECTION–5A
SCALE 1/25

SECTION–1B
SCALE 1/25

SECTION–2B
SCALE 1/25

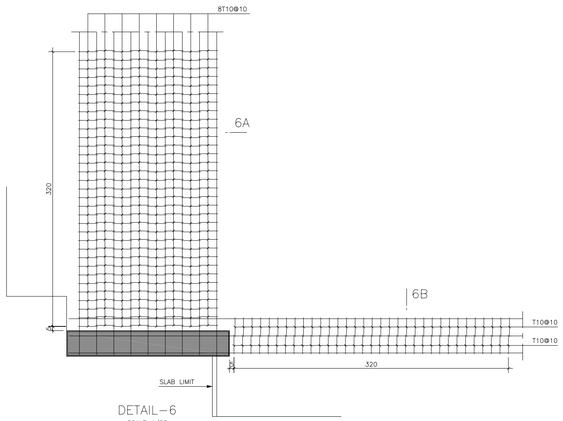

DETAIL–6
SCALE 1/25

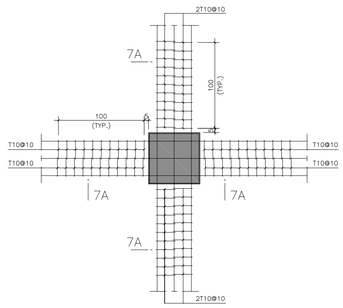

DETAIL–7
SCALE 1/25

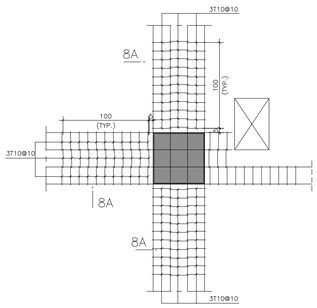

DETAIL–8
SCALE 1/25

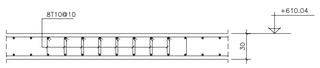

SECTION–6A
SCALE 1/25

SECTION–7A
SCALE 1/25

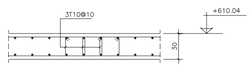

SECTION–8A
SCALE 1/25

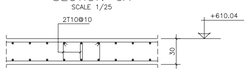

SECTION–6B
SCALE 1/25

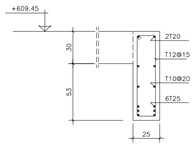

BEAM–1
SCALE 1/20

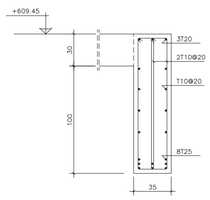

BEAM–2
SCALE 1/20

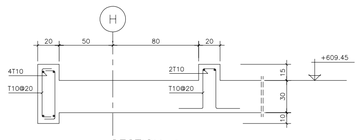

SECTION–A
SCALE 1/20

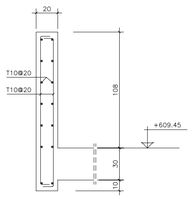

SECTION–B
SCALE 1/20

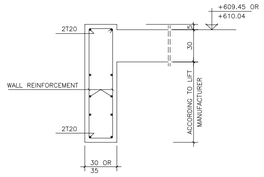

SECTION–C
SCALE 1/20

NOTES

1– FOR GENERAL NOTES AND GENERAL DETAILS REFER TO DRWGS. NO. S000, S001, S002 & S003.

No.	REVISION	APP'D	DATE

CLIENT

الجمهورية اللبنانية
مجلس الإنماء والإعمار

CONSULTANT

Khatib & Alami
consolidated engineering company S.A.L.

PROJECT TITLE

CHHIM GOVERNMENTAL OFFICES BUILDING

DRAWING TITLE

SECOND FLOOR DETAILS

	NAME	DRAWING No.
DESIGNED	O.N.	S501
DRAWN	A.M.	
COORDINATED	H.J.	PROJECT No.
CHECKED	F.K.	BY151600
APPROVED	I.F.K.	
SCALE	AS SHOWN	FILE NAME
DATE	February 2016	BY1516–SD–F02–01

APPROVED FOR CONSTRUCTION

TENDER SUBMISSION

SHEET No.