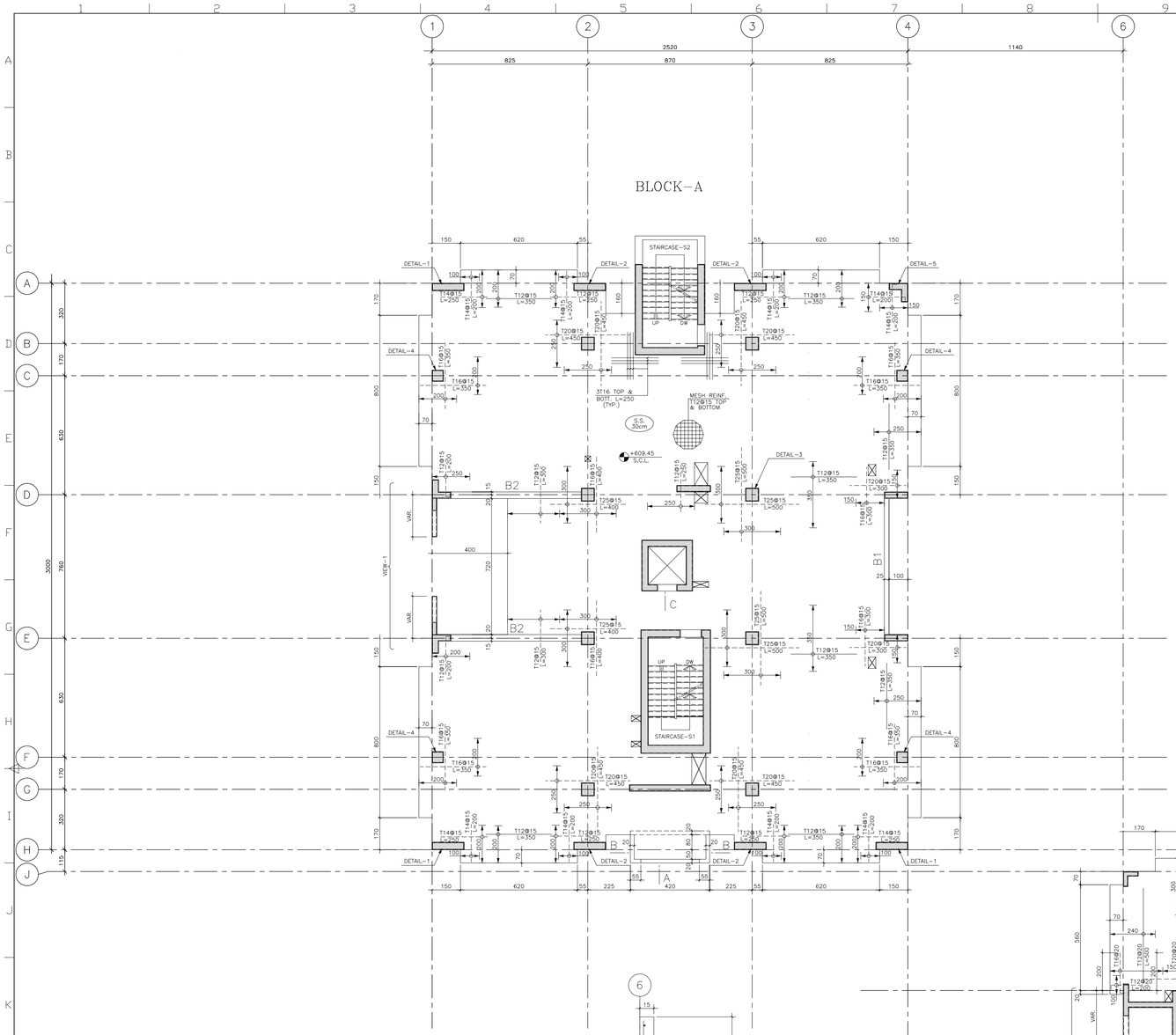

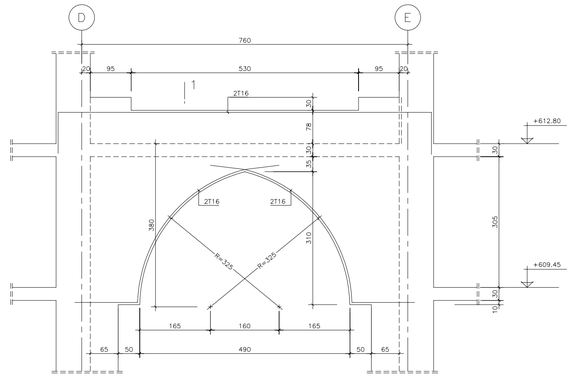

VIEW-1
SCALE 1/50

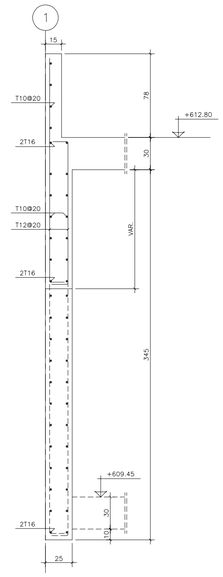

SECTION-1
SCALE 1/20

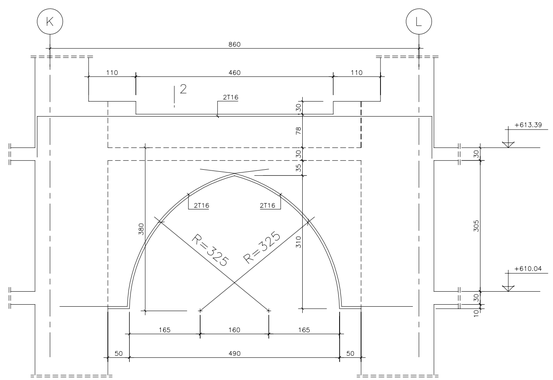

VIEW-2
SCALE 1/50

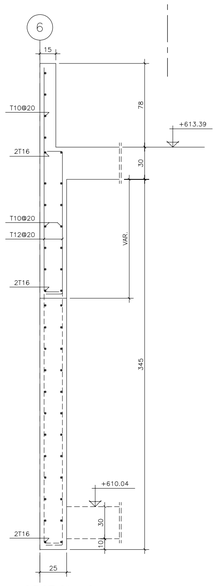

SECTION-2
SCALE 1/20

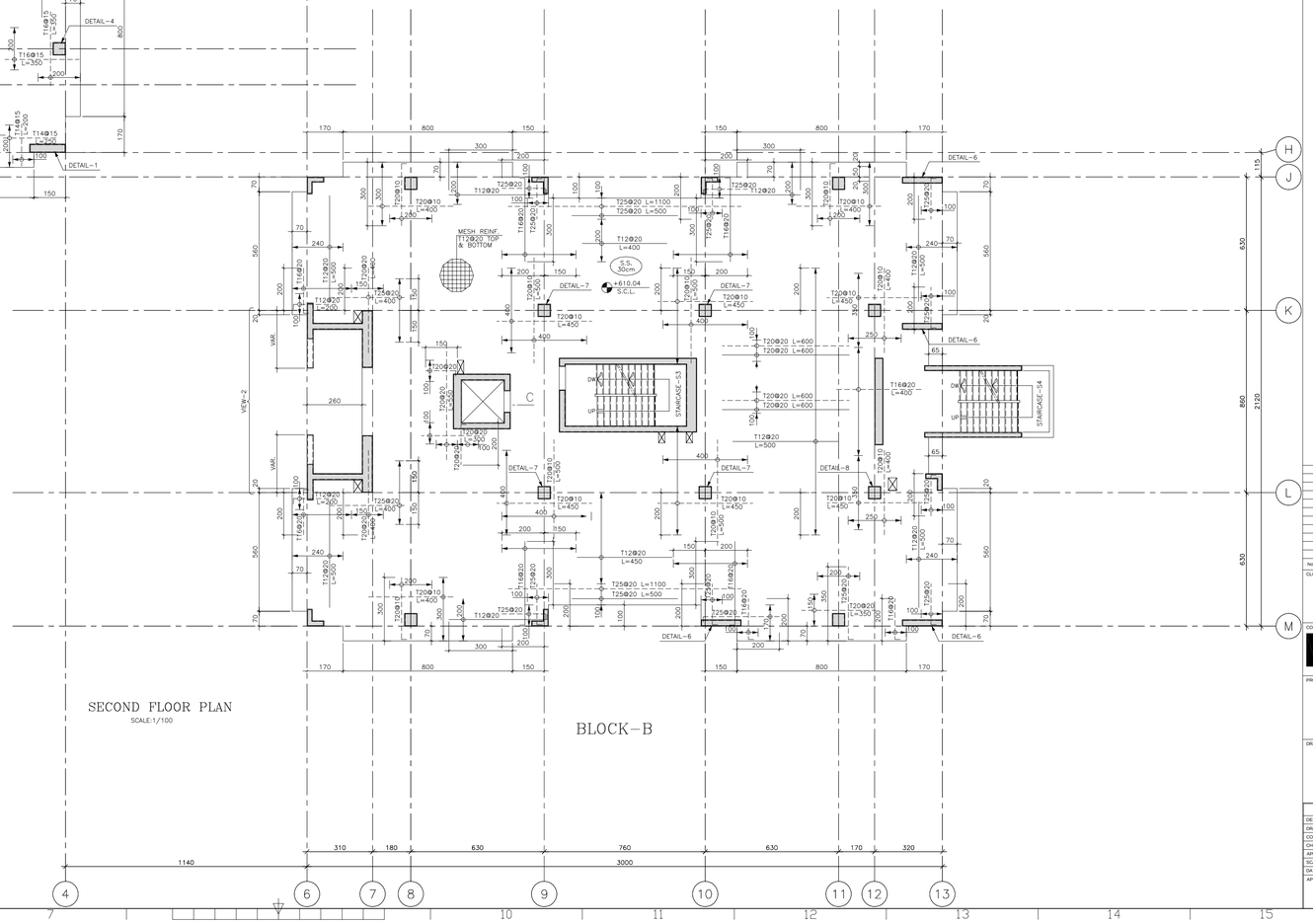

SECOND FLOOR PLAN
SCALE:1/100

BLOCK-B

NOTES

N

1- FOR GENERAL NOTES AND GENERAL DETAILS REFER TO DRWGS. NO. S000, S001, S002 & S003.

3- FOR ALL OPENINGS & SLEEVES IN WALLS & SLABS REFER TO ARCHITECTURAL, ELECTRICAL & MECHANICAL DRAWINGS.

4- EXTRA REINFORCEMENT AROUND OPENINGS IF NOT SHOWN ON PLAN SHOULD BE READ FROM GENERAL NOTES DRAWING.

No.	REVISION	APP'D	DATE

CLIENT

الجمهورية اللبنانية
مجلس الإنماء والإعمار

CONSULTANT

خطيب وعلمي
شركة الاستشارات الهندسية ش.م.م
Khatib & Alami
consultant engineering company SAL

PROJECT TITLE

CHHIM GOVERNMENTAL OFFICES BUILDING

DRAWING TITLE

SECOND FLOOR PLAN & DETAILS

	NAME	DRAWING No.
DESIGNED	O.N.	S500
DRAWN	A.M.	PROJECT No.
COORDINATED	H.J.	BY151600
CHECKED	F.K.	
APPROVED	I.F.K.	
SCALE	AS SHOWN	FILE NAME
DATE	February 2016	BY1516-SP-F02-01

APPROVED FOR CONSTRUCTION

TENDER SUBMISSION

SHEET No.